

SMOKE 'N GO SERIES

FLEXIBLE SOLUTIONS FOR TOBACCO SMOKE FILTRATION

euromate
PURE AIR

Smoke 'n Go: Flexible, modular & efficient

The Smoke 'n Go (SnG) product range by Euromate offers a complete and modular solution for tobacco smoke control. With a combination of advanced air filtration and odour-free ash and cigarette end disposal, it creates a clean and comfortable indoor environment for both smokers and non-smokers. There is a suitable configuration depending on your needs, ranging from complete smoking cabins to standalone filter units or OEM modules for custom integration.

High-performance filtration

Smoke 'n Go uses a five-stage filtration system with HEPA or electrostatic filter options that remove up to 99.9% of tobacco smoke and odours. Clean air is continuously recirculated into the room, ensuring a healthy indoor environment without the need for external ducting or ventilation adjustments.

Smart IoT Solution

With the online Air Safety Portal, you can effortlessly monitor the performance of your Smoke 'n Go units, adjust operating parameters and manage the system remotely. The intelligent control system automatically optimises airflow and filtration efficiency based on usage, ensuring consistently clean air and minimal energy consumption.

Odourless, high-capacity ash collection

The odourless ashtray has a capacity of several thousand cigarette butts. Still-burning cigarette and cigar butts disappear without a trace of smoke or annoying smells. This also enhances the fire safety within your company.



Smoke 'n Go cabin at Frankfurt Airport



Smoke 'n Go cabin at a casino

Robust and future-proof design

Continuous product innovation and technical refinement have resulted in the current generation of Smoke 'n Go. It's a robust, modern and future-proof system that combines proven performance with the latest filtration and control technologies.

Proven and reliable solution

Smoke 'n Go is one of Euromate's most established and trusted air cleaning solutions, certified by leading independent institutes (e.g. TÜV, ECN). For many years, it has been successfully implemented in offices, airports, hospitality venues and public buildings around the world.

Sustainable and responsible

By providing a controlled and odour-free smoking solution, Smoke 'n Go helps organisations promote a cleaner, healthier and more sustainable environment. This in turn enhances comfort, safety and the overall corporate image.

Smoke 'n Go product range: One technology, three configurations

The Smoke 'n Go Series offers maximum flexibility through a modular product range. Each configuration uses the same high-efficiency filtration technology and intelligent control system, providing reliable performance across every application. With this flexible range, Euromate offers a solution for every smoke control scenario, from discreet indoor smoking zones to high-end installations in visible public areas. Contact us for tailored advice and support.

Smoke 'n Go Cabins: Complete enclosed smoking cabin for controlled environments

The fully equipped smoking cabin is designed to contain smoke within a dedicated space while maintaining visual and social contact with non-smokers nearby.

Key Benefits

- Available in four sizes: Mezzo (4–5 persons), Espace (6–7), Plaza (12–14) and Double Plaza (24–28)
- Equipped with a five-stage filtration system including either HEPA or electrostatic filters
- Optional sliding doors with self-closing mechanism
- Quiet operation thanks to integrated noise insulation
- Ideal for airports, offices, public buildings and hospitality environments



Smoke 'n Go Standalone: Compact, plug-and-play filter bar for open or ventilated spaces

The SnG Standalone is an independent filter bar that can be placed freely within a room. It is a flexible solution for situations where a full cabin is not required.

Key Benefits

- Perfect for designated smoking rooms or poorly ventilated indoor areas
- Available with HEPA or electrostatic filtration
- Compact and easy to install
- Delivers the same filtration performance as the cabin version
- Scalable, easy to add units based on room size

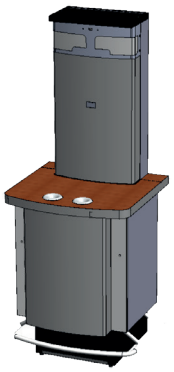

Smoke 'n Go OEM Module: Integrated filtration for custom-built enclosures

The SnG OEM is an integrated filter unit, intended for installation inside custom-built glass cabins or smoking enclosures.

Key Benefits

- Commonly used by international distribution partners
- Not suitable for standalone use, must be installed in an enclosure
- Available in both HEPA and electrostatic configurations
- Ideal for tailor-made solutions where aesthetics and flexibility are key



Available models of the Smoke 'n Go cabins

The smoking cabin is available in three different models. Each cabin can be extended with options such as a lean-to support, foot rest or poster display for (company) information or marketing purposes.

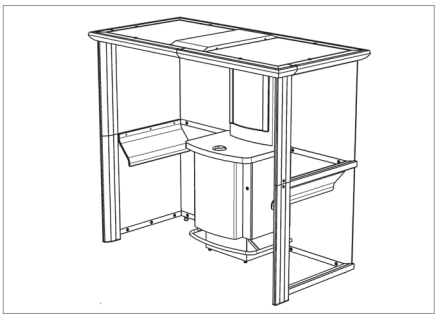

MEZZO
4-5 persons
2200 x 1215 x 2165 mm

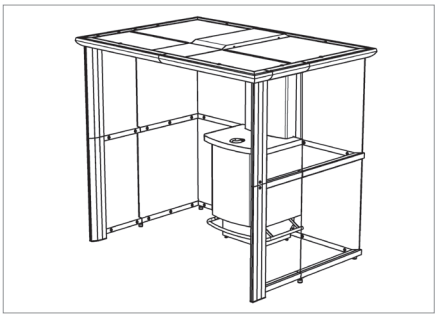

ESPACE
6-7 persons
2200 x 1715 x 2165 mm

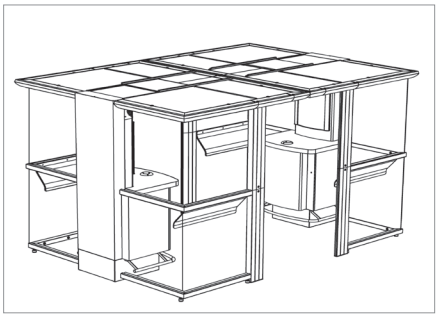

PLAZA
12-14 persons
3430 x 2200 x 2165 mm

DOUBLE PLAZA
24-28 persons
4524 x 3453 x 2165 mm

About Euromate

Euromate is a leading Dutch company with over half a century of expertise in effective and sustainable air cleaning. We supply high-quality products and services to companies, contributing to a cleaner, healthier and safer indoor climate. From design to production and regular maintenance; the entire process is managed in-house.

We aim to use European components as much as possible, resulting in higher quality and longer life of our air cleaners and systems. This approach not only contributes to the sustainability of our air cleaners, but also reduces transport movements and associated CO_2 emissions. By keeping the entire process in-house, we ensure the quality and sustainability of our products, which is central to our mission for a healthier and cleaner living environment.

euromate
PURE AIR

Euromate
Minervum 7324
4817 ZD Breda
The Netherlands
T: +31 (0)76 5789 550
E: request@euromate.com

Euromate BVBA
Antwerpen Harmonie
Lange Lozanastraat 142
2018 Antwerp
Belgium
T: +32 (0) 3 740 00 00
E: request@euromate.com

Euromate GmbH
Josef-Reuschenbach-Straße 7
53547 Breitscheid
Germany
T: +49 (0)2638 2662580
E: vertrieb@euromate.com

www.euromate.com

© Euromate 2026
Euromate reserves the right to make design changes.

07012026