euromate
PURE AIR

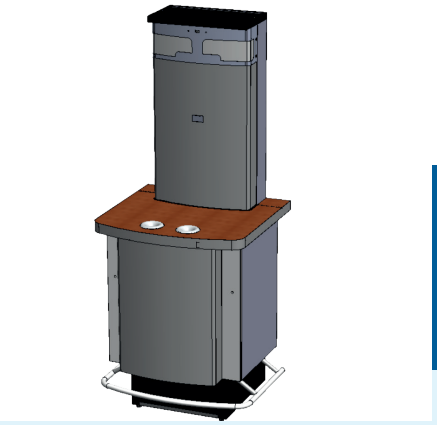

SMOKE 'N GO SERIES

STANDALONE E-MAX

The Smoke 'n Go Standalone is part of Euromate's Smoke 'n Go (SnG) product range, a complete and modular solution for tobacco smoke control. This self-contained filtration unit effectively purifies tobacco smoke and contributes to a clean and comfortable indoor environment for both smokers and non-smokers. Thanks to the free-standing filter bar, it offers a flexible solution in areas where a full smoking cabin is not required. The Smoke 'n Go Standalone E-max is equipped with electrostatic filtration.

SPECIFICATIONS

Physical dimensions and properties	
Number of people	4-5
Measurements	855 x 810 x 2165 mm
Material frame	• aluminium and steel (coated RAL 9007)
Colour: • table top • cabinet	 • beech • anthracite
Ash container	• Capacity: 8,000 cigarette ends, two compartments, lid and 2 sealing plugs.
Ashtray:	• 2: ø 30 mm inside, ø 130 mm outside, without valve.
Performance	
Airflow	700 m^3/hour
Noise level	54.1 dB(A)
Efficiency	99.997% of all harmful tobacco related gases and particles (eg. nicotine and formaldehyde)
Filters and maintenance	
• 2 x pre-filter • 2 x ElectroMax filter • 1 x HEPA filter • 1 x gas oxidation filter (option) • 1 x ACF-1 activated carbon filter • 1 x ACF-2 activated carbon filter	• disposable • cleanable/reusable • disposable • disposable • disposable • disposable
Electrical data	
Voltage	230V/1~/50-60Hz
Power consumption: • stand-by • In operation	 • without poster display: 75 W with poster display: 105 W • without poster display: 210 W with poster display: 240 W
Power supply	mains entrance
Lighting	LED, 12V/5W
Operation	via Air Safety Portal

Available options	
Foot support	1 piece
Poster display	1 piece
Gas oxidation filter	1 set (2 pieces)
Shipping data	
Gross weight	378 kg
Packaging dimensions	1 pallet 1200 x 800 x 1600 mm 1 pallet 2400 x 800 x 700 mm
Harmonized Tariff Code	84213920
Country of origin	the Netherlands

CERTIFICATES

CE

Type	SnG Standalone E-max
Product category	Smoking cabins and filter bars
Version	03022026/0