euromate
PURE AIR

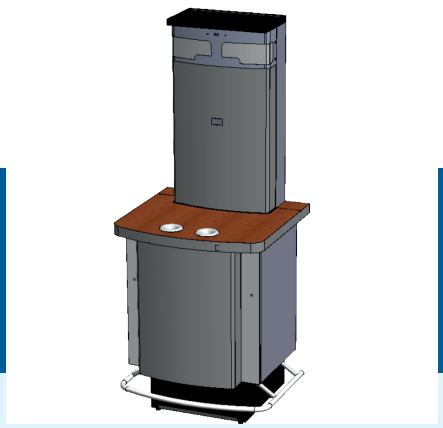

# SMOKE 'N GO SERIES

## STANDALONE HEPA

*The Smoke 'n Go Standalone is part of Euromate's Smoke 'n Go (SnG) product range, a complete and modular solution for tobacco smoke control. This self-contained filtration unit effectively purifies tobacco smoke and contributes to a clean and comfortable indoor environment for both smokers and non-smokers. Thanks to the free-standing filter bar, it offers a flexible solution in areas where a full smoking cabin is not required. The Smoke 'n Go Standalone HEPA is equipped with HEPA filtration.*

### SPECIFICATIONS

| **Physical dimensions and properties** | |
|---|---|
| Number of people | 4-5 |
| Measurements | 855 x 810 x 2165 mm |
| Material frame | • aluminium and steel (coated RAL 9007) |
| Colour:<br>• table top<br>• cabinet | <br>• beech<br>• anthracite |
| Ash container | • Capacity: 8,000 cigarette ends, two compartments, lid and 2 sealing plugs. |
| Ashtray: | • 2: ø 30 mm inside, ø 130 mm outside, without valve. |
| **Performance** | |
| Airflow | 700 $m^3$/hour |
| Noise level | 54.1 dB(A) |
| Efficiency | 99.997% of all harmful tobacco related gases and particles (eg. nicotine and formaldehyde) |
| **Filters and maintenance** | |
| • 2 x pre-filter<br>• 1 x fine dust filter<br>• 1 x HEPA filter<br>• 1 x gas oxidation filter (option)<br>• 1 x ACF-1 activated carbon filter<br>• 1 x ACF-2 activated carbon filter | • disposable<br>• disposable<br>• disposable<br>• disposable<br>• disposable<br><br>• disposable |
| **Electrical data** | |
| Voltage | 230V/1~/50-60Hz |
| Power consumption:<br>• stand-by<br><br>• In operation | <br>• without poster display: 75 W<br>with poster display: 105 W<br>• without poster display: 210 W<br>with poster display: 240 W |
| Power supply | mains entrance |
| Lighting | LED, 12V/5W |
| Operation | via Air Safety Portal |

| **Available options** | |
|---|---|
| Foot support | 1 piece |
| Poster display | 1 piece |
| Gas oxidation filter | 1 set (2 pieces) |
| **Shipping data** | |
| Gross weight | 378 kg |
| Packaging dimensions | 1 pallet 1200 x 800 x 1600 mm<br>1 pallet 2400 x 800 x 700 mm |
| Harmonized Tariff Code | 84213920 |
| Country of origin | the Netherlands |

### CERTIFICATES

CE

| | |
|---|---|
| Type | SnG Standalone HEPA |
| Product category | Smoking cabins and filter bars |
| Version | 03022026/0 |